GRIPFIT PUSH-IN FITTINGS

SERIES 7000 - BEVERAGE AND WATER FILTRATION

News

Tube external diameters: 4, 6, 8 mm
Fittings threads: ISO-228 BSPP (G1/8, G1/4, G3/8).

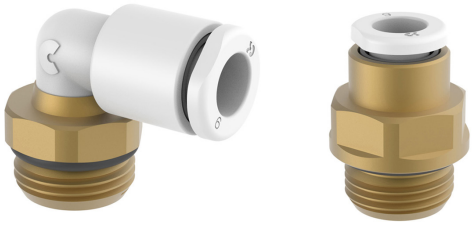

- Bio-souced materials (composite)
- Low Lead Brass (CW510L)
- Easy connection and disconnection

Series 7000 Beverage and Water filtration is a new range of push-in fittings made of reinforced bio-sourced technopolymer and low lead brass.
Thanks to the materials and new connection technology, these fittings are ideal for beverage dispensing and water filtration systems.

RoHS

Reach

21 CFR compliance

ISO 14743:2020

DM174 Drinking Water

Regulation (CE) n. 1935/2004 n. 2023/2006

NSF169* **

NSF61 **

Regulation (CE) n. 2023/2006

* Check the NSF certified models here: https://info.nsf.org

** NSF169 and NSF61 currently available for brass straight fittings. Available for full range soon.

General Data

Diameter		Ø4 mm	Ø6 mm	Ø8 mm
Maximum working pressure	- 20° / + 40° + 40° / + 70° + 70° / + 100°	16 bar 16 bar 16 bar	16 bar 14 bar 12 bar	16 bar 12 bar 10 bar
Minimum working pressure	-0,9 bar			
Temperature	-20 ÷ +100 (see characteristics of tubes used) (NSF 61 requirement up to 82°C)			
Storage temperature	-10° ÷ +60°			
Threads	GAS cylindrical ISO-228 BSPP			
Connecting tube	Polyurethane (PU), Polyethylene (PE), Polyamide (PA), Fluoropolymer (PTFE), Polyester (HY3L), rigid metal pipe with smooth grooved metal end			
Fluid	Drinking and mains water, beverages and gas (for other fluids consult our technicians)			
Materials	(A) Body = Technopolymer (PA11), low lead brass (CW510L) (B) Button = Technopolymer (PA66) (C) Gripping ring = Stainless steel (AISI 301) (D) Seals = EPDM (E) Thread = Low lead brass (CW510L)			

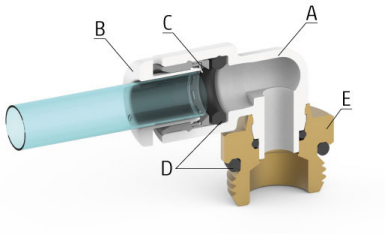

Products designed for industrial applications. General terms and conditions for sale are available on www.camozzi.com
This document contains a description of the products offered by Camozzi Automation at time of publication.
For more complete and up to date information about the Camozzi Automation product range, please refer to our online catalogue at https://shop.camozzi.com

Assembly of the tube

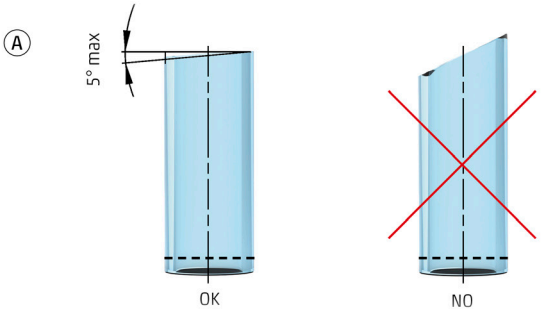

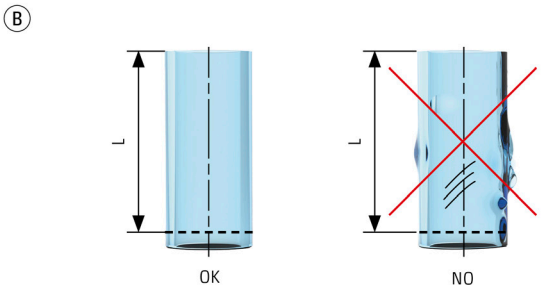

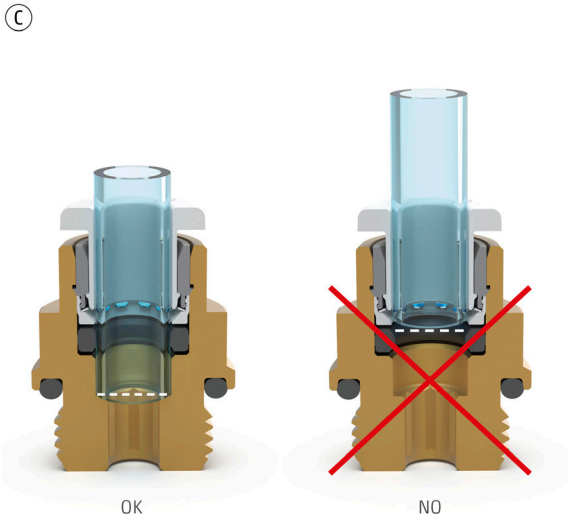

To guarantee a correct, safe and tight connection, it is necessary to cut the tube correctly.
The cutting angle should not exceed 5° (Picture A), and we recommend using a suitable tube cutting tool, (Refer to PNZ).
The outer surface of the tube should be smooth and free from any kind of damage or dirt (Picture B). When inserting the tube, make sure to push it into the fitting, down to the tube stop (Picture C).

Please ensure mounting torques meet the values shown in the table on the right.

Thread	Tightening torque (Nm)
G1/8	2 - 12
G1/4	3 - 30
G3/8	4 - 50

Make sure that the torsional forces of the fixing holes respect the values indicated in the table alongside.

Thread	Tightening torque (Nm)
Screw M4	0,5 - 1

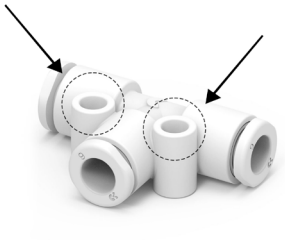

Products designed for industrial applications. General terms and conditions for sale are available on www.camozzi.com
This document contains a description of the products offered by Camozzi Automation at time of publication.
For more complete and up to date information about the Camozzi Automation product range, please refer to our online catalogue at https://shop.camozzi.com

Male straight Mod. B6512



Low lead brass (CW510L)
Thread BSPP ISO-228

* Check the NSF certified models here: https://info.nsf.org

** NSF169 and NSF61 currently available for brass
straight fittings. Available for full range soon..

NSF61 **

NSF169* **

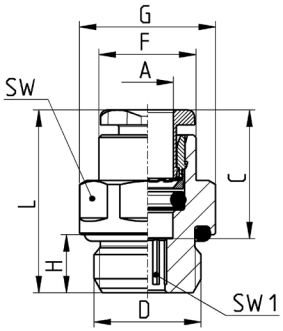

Mod.	A	D	C	F	G	H	L	SW	SW1	Weight [g]
B6512 4-1/8	4	G1/8	14,6	8,8	13,5	6	20	12	2,5	8
B6512 4-1/4	4	G1/4	14,6	8,8	16,4	7	21,5	15	2,5	12
B6512 6-1/8	6	G1/8	15,5	11,7	13,5	6	21	12	4	8
B6512 6-1/4	6	G1/4	15,5	11,7	16,4	7	22	15	4	11
B6512 8-1/8	8	G1/8	16,8	13,7	15,2	6	25,2	14	5	12
B6512 8-1/4	8	G1/4	16,8	13,7	16,4	7	24	15	6	14
B6512 8-3/8	8	G3/8	16,8	13,7	20,5	7	23,5	19	7	24

Male plug-in stem Mod. B6812



Low lead brass (CW510L) Thread BSPP ISO-228

* Check the NSF certified models here: https://info.nsf.org

** NSF169 and NSF61 currently available for brass
straight fittings. Available for full range soon.

NSF61 **

NSF169* **

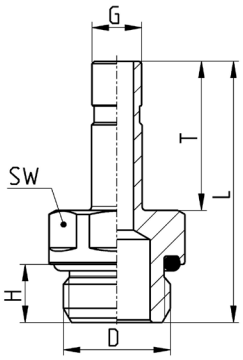

Mod.	D	G	H	L	T	SW	Weight [g]
B6812 4-1/8	G1/8	4	6	29	16,5	12	9
B6812 4-1/4	G1/4	4	7	30	16,5	15	14
B6812 6-1/8	G1/8	6	6	30,5	18	12	10
B6812 6-1/4	G1/4	6	7	31,5	18	15	14,5
B6812 8-1/8	G1/8	8	6	33	20,5	12	12
B6812 8-1/4	G1/4	8	7	34	20,5	15	16,5
B6812 8-3/8	G3/8	8	7	36	20,5	19	26

Products designed for industrial applications. General terms and conditions for sale are available on www.camozzi.com
This document contains a description of the products offered by Camozzi Automation at time of publication.
For more complete and up to date information about the Camozzi Automation product range, please refer to our online catalogue at https://shop.camozzi.com

Swivel male elbow Mod. B7522

Thread BSPP ISO-228



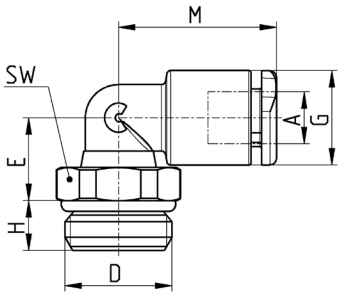

Mod.	A	D	E	G	H	M	SW	Weight [g]
B7522 4-1/8	4	G1/8	9	9,2	5	17,5	12	7
B7522 4-1/4	4	G1/4	9	9,2	6	17,5	14	10
B7522 6-1/8	6	G1/8	10	11,4	5	19	12	8
B7522 6-1/4	6	G1/4	10	11,4	6	19	14	11
B7522 8-1/8	8	G1/8	13,5	13,7	5	21	12	11
B7522 8-1/4	8	G1/4	12	13,7	6	21	14	14
B7522 8-3/8	8	G3/8	12	13,7	7	21	19	19

Plug-in reducer Mod. B7800



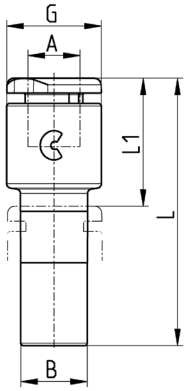

Mod.	A	B	G	L	L1	Weight [g]
B7800 4-6	4	6	9,3	30	14,5	2
B7800 4-8	4	8	9,3	31	14,5	3
B7800 6-8	6	8	11,4	32,5	15,5	4

Products designed for industrial applications. General terms and conditions for sale are available on www.camozzi.com
This document contains a description of the products offered by Camozzi Automation at time of publication.
For more complete and up to date information about the Camozzi Automation product range, please refer to our online catalogue at https://shop.camozzi.com

Plug-in elbow Mod. B7555



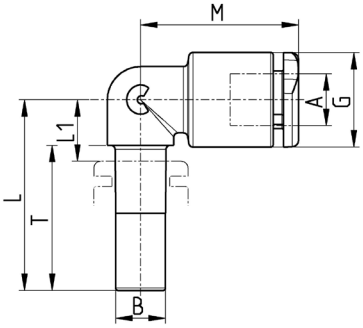

Mod.	A	B	G	L	L1	M	T	Weight [g]
B7555 4-4	4	4	9,2	21	7	19	16,5	2
B7555 6-6	6	6	11,4	23	8	19	17,5	4
B7555 8-8	8	8	13,7	25	9	21	18,5	5

Unequal union Mod. B7580



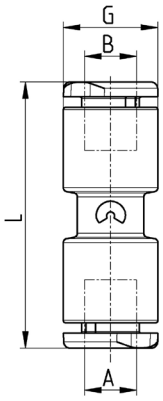

Mod.	A	B	G	L	Weight [g]
B7580 4	4	4	9,2	30	4
B7580 6	6	6	11,4	32	6
B7580 8	8	8	13,7	34,5	8

Products designed for industrial applications. General terms and conditions for sale are available on www.camozzi.com
This document contains a description of the products offered by Camozzi Automation at time of publication.
For more complete and up to date information about the Camozzi Automation product range, please refer to our online catalogue at https://shop.camozzi.com

Equal union elbow Mod. B7550



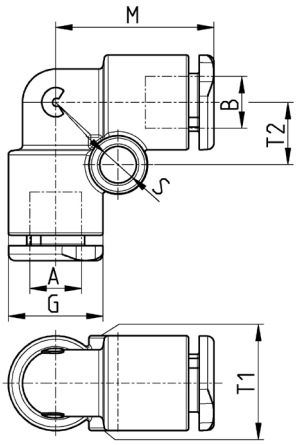

Mod.	A	B	G	M	S	T1	T2	Weight [g]
B7550 4	4	4	9,2	17,5	4	9,2	6,5	4
B7550 6	6	6	11,4	19	4	11,4	7,5	6
B7550 8	8	8	13,7	21	4	13,7	8,5	9

Equal union tee Mod. B7540



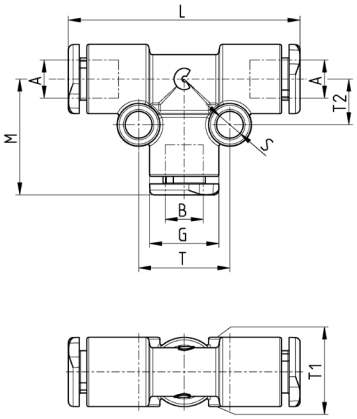

Mod.	A	B	G	L	M	S	T	T1	T2	Weight [g]
B7540 4	4	4	9,2	35	17,5	4	12	9,2	6,5	6
B7540 6	6	6	11,4	38	19	4	15	11,4	7,5	9
B7540 8	8	8	13,7	42	21	4	17	13,7	8,5	14

Products designed for industrial applications. General terms and conditions for sale are available on www.camozzi.com
This document contains a description of the products offered by Camozzi Automation at time of publication.
For more complete and up to date information about the Camozzi Automation product range, please refer to our online catalogue at https://shop.camozzi.com

Equal union Y Mod. B7560



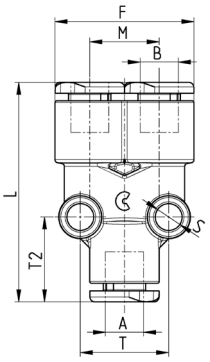

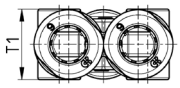

Mod.	A	B	F	L	M	S	T	T1	T2	Weight [g]
B7560 4	4	4	18,2	34,2	9	4	10,8	9,5	13	6
B7560 6	6	6	23	36	11,4	4	14,5	11,5	14	9
B7560 8	8	8	27,2	40,5	13,5	4	17	14	15	15

Plastic male plug Mod. B6900



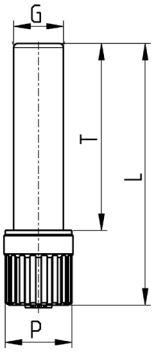

Mod.	G	L	P	T	Weight [g]
B6900 4	4	29	8	20	1
B6900 6	6	31,5	8	22,5	1
B6900 8	8	34,5	12	24,5	2

Products designed for industrial applications. General terms and conditions for sale are available on www.camozzi.com
This document contains a description of the products offered by Camozzi Automation at time of publication.
For more complete and up to date information about the Camozzi Automation product range, please refer to our online catalogue at https://shop.camozzi.com

Groove for metal pipe

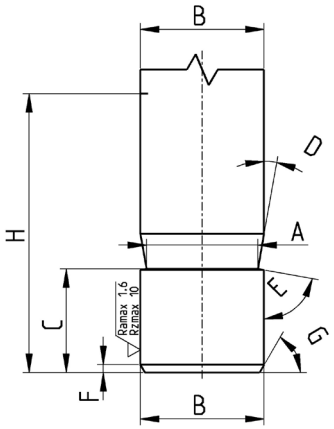

Made by Camozzi grooving tool 8TRT (or machining).

A	B	C	D	E	F	G	H
3,4	4	5,3	10°	80°	0,5	60°	16,5
5,2	6	6,25	10°	80°	0,5	60°	18
7,2	8	6,4	10°	80°	0,5	60°	20

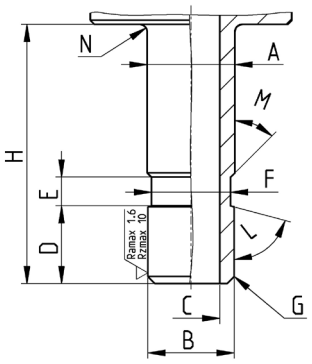

Made by machining.

A	B	C	D	E	F	G	H	L	M	N
4,1	4	2	5,3	2	3,5	0,5x45°	16,5	75°	45°	0,5
6,1	6	4	5,4	2	5,5	0,5x45°	18	75°	45°	0,5
8,1	8	6	6	2	7,5	0,5x45°	20,5	75°	45°	0,5

Grooving tool for metallic tubes



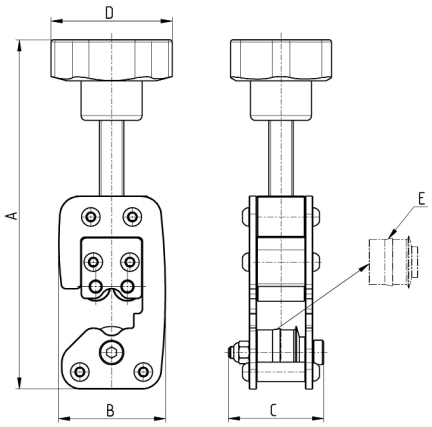

Mod.	Tube Ø	A [max]	B	C	D	Weight [g]	E [spare wheel]
GTRT 4	4	138	43,5	39	50	450	RGTRT 4
8TRT 6	6	140	43,5	39	50	450	RTRT 6
8TRT 8	8	143	43,5	39	50	450	RTRT 8

Products designed for industrial applications. General terms and conditions for sale are available on www.camozzi.com
This document contains a description of the products offered by Camozzi Automation at time of publication.
For more complete and up to date information about the Camozzi Automation product range, please refer to our online catalogue at https://shop.camozzi.com

Plastic junction Mod. 7950



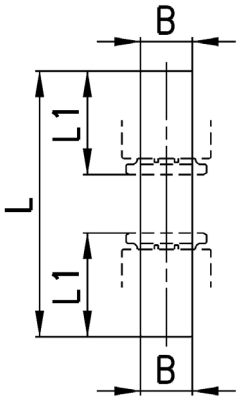

Mod.	B	L	L1	Weight [g]
7950 4	4	37	14	1
7950 6	6	39	15	1
7950 8	8	41	16	1

Products designed for industrial applications. General terms and conditions for sale are available on www.camozzi.com
This document contains a description of the products offered by Camozzi Automation at time of publication.
For more complete and up to date information about the Camozzi Automation product range, please refer to our online catalogue at https://shop.camozzi.com