News

GRIPFIT PUSH-IN FITTINGS
SERIES 7000 - COOLING

Tube external diameters: 6, 8, 10, 12, 16 mm
Fittings threads: ISO-228 BSPP (G1/8, G1/4, G3/8).

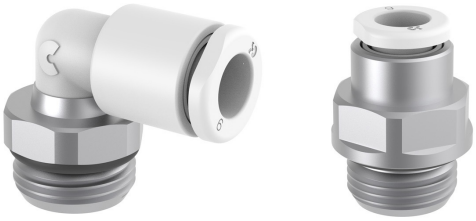

- Resistant to water pressure and erosion
- Dimensional stability with water contact
- Resistant to corrosion

Series 7000 Cooling push-in fittings have been designed with a special technopolymer based on bio-sourced renewable raw materials that allow the component to resist water absorption, temperature variations and liquid cooling additives.

ISO 14743:2020

Reach

RoHS

General Data

Diameter		Ø 6 mm	Ø 8 mm	Ø 10 mm	Ø 12 mm	Ø 16 mm
Maximum working pressure	- 20° / + 40° + 40° / + 70° + 70° / + 100°	16 bar 14 bar 12 bar	16 bar 12 bar 10 bar	16 bar 12 bar 10 bar	16 bar 10 bar 8 bar	16 bar 10 bar 8 bar
Minimum working pressure	-0,9 bar					
Temperature	- 20 ÷ + 100 (See characteristics of tubes used)					
Threads	GAS cylindrical ISO-228 BSPP					
Connecting tube	Polyurethane (PU), Polyethylene (PE), Polyamide (PA), Fluoropolymer (PTFE), Polyester (HY3L), rigid metal pipe with smooth grooved metal end					
Fluid	Industrial water and cooling fluids (for other fluids consult our technicians)					
Materials	(A) Body = Technopolymer (PA11), Brass with chemical nickel plating (B) Button = Technopolymer (PA66) (C) Gripping ring = Stainless steel (AISI 301) (D) Seals = EPDM (E) Thread = Brass with chemical nickel plating					

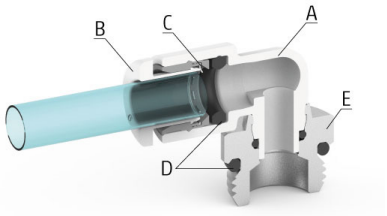

Products designed for industrial applications. General terms and conditions for sale are available on www.camozzi.com
This document contains a description of the products offered by Camozzi Automation at time of publication.
For more complete and up to date information about the Camozzi Automation product range, please refer to our online catalogue at https://shop.camozzi.com

Male straight Mod. W6512



Chemical nickel-plated brass
Thread BSPP ISO-228

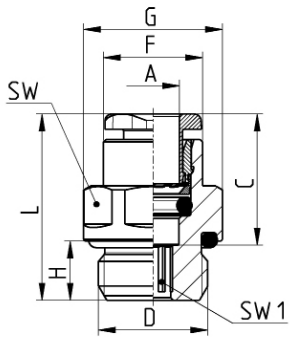

Mod.	A	D	C	F	G	H	L	SW	SW1	Weight [g]
W6512 6-1/8	6	G1/8	15,5	11,7	13,5	6	21	12	4	8
W6512 6-1/4	6	G1/4	15,5	11,7	16,4	7	22	15	4	11
W6512 8-1/8	8	G1/8	16,8	13,7	15,2	6	25,2	14	5	12
W6512 8-1/4	8	G1/4	16,8	13,7	16,4	7	24	15	6	14
W6512 8-3/8	8	G3/8	16,8	13,7	20,5	7	23,5	19	7	24
W6512 10-1/4	10	G1/4	19	15,9	18,5	7	28,5	17	7	22,5
W6512 10-3/8	10	G3/8	19	15,9	20,5	7	23,5	19	8	22,5
W6512 10-1/2	10	G1/2	19	15,9	24,8	8	24,5	22	8	37,5
W6512 12-3/8	12	G3/8	21,2	19,7	21,5	7	27	20	9	25
W6512 12-1/2	12	G1/2	21,2	19,7	24,8	8	27	22	9	38,5
W6512 16-1/2	16	G1/2	21,3	26	30	8	33	27	-	44
W6512 16-3/4	16	G3/4	21,3	26	30	9	32,5	27	-	60

Female straight Mod. W6463



Chemical nickel-plated brass
Thread BSPP ISO-228

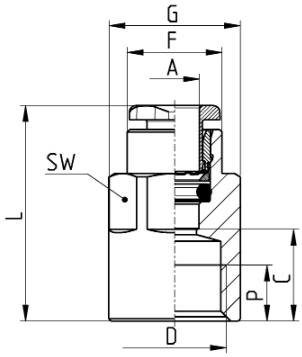

Mod.	A	D	C	F	G	L	P [min]	SW	Weight [g]
W6463 6-1/8	6	G1/8	10	11,7	13	25,5	6	12	13
W6463 6-1/4	6	G1/4	11,5	11,9	16,5	27	7	15	21,5
W6463 8-1/8	8	G1/8	9,5	13,7	15,2	26,5	6	14	13,5
W6463 8-1/4	8	G1/4	11,5	13,7	16,5	28,5	7	15	20,5
W6463 8-3/8	8	G3/8	12,5	13,7	20,5	29,5	8	19	25
W6463 10-1/4	10	G1/4	11,5	15,9	18,5	30,5	7	17	26
W6463 10-3/8	10	G3/8	13	15,9	20	32	8	17	30,5
W6463 10-1/2	10	G1/2	17	15,9	24	36	9,5	17	42
W6463 12-3/8	12	G3/8	12,8	19,7	21,5	34	8	20	34
W6463 12-1/2	12	G1/2	16,8	19,7	23,8	51	9,5	20	50
W6463 16-1/2	16	G1/2	16,7	26	30	46	9,5	27	74
W6463 16-3/4	16	G3/4	16,7	26	30	46	11	27	94

Products designed for industrial applications. General terms and conditions for sale are available on www.camozzi.com
This document contains a description of the products offered by Camozzi Automation at time of publication.
For more complete and up to date information about the Camozzi Automation product range, please refer to our online catalogue at https://shop.camozzi.com

End cap Mod. W6750

Chemical nickel-plated brass



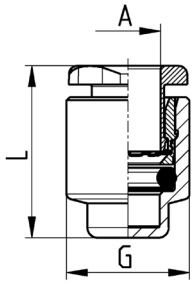

Mod.	A	G	L	Weight [g]
W6750 6	6	11,8	16,5	4,5
W6750 8	8	13,8	18	5,5
W6750 10	10	16	21	11
W6750 12	12	19,7	23,5	17
W6750 16	16	26	30,5	31

Male plug-in stem Mod. W6812

Chemical nickel-plated brass
Thread BSPP ISO-228



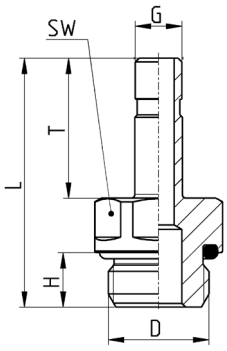

Mod.	D	G	H	L	T	SW	Weight [g]
W6812 6-1/8	G1/8	6	5,5	29,3	18	12	9
W6812 6-1/4	G1/4	6	7	31	18	14	12
W6812 8-1/8	G1/8	8	5,5	31,8	20,5	12	10,5
W6812 8-1/4	G1/4	8	7	33,5	20,5	14	14
W6812 8-3/8	G3/8	8	8	34,8	20,5	19	24
W6812 10-1/4	G1/4	10	7	37	23	15	17
W6812 10-3/8	G3/8	10	7	37	23	19	26
W6812 10-1/2	G1/2	10	8	39	23	22	36
W6812 12-3/8	G3/8	12	7	38	24	19	26,5
W6812 12-1/2	G1/2	12	8	40	24	22	38
W6812 16-1/2	G1/2	16	8	48	32	22	38,5
W6812 16-3/4	G3/4	16	9	50	32	27	54

Products designed for industrial applications. General terms and conditions for sale are available on www.camozzi.com
This document contains a description of the products offered by Camozzi Automation at time of publication.
For more complete and up to date information about the Camozzi Automation product range, please refer to our online catalogue at https://shop.camozzi.com

Swivel male elbow Mod. W7522

Thread BSPP ISO-228



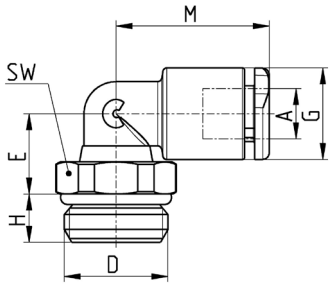

Mod.	A	D	E	G	H	M	SW	Weight [g]
W7522 6-1/8	6	G1/8	10	11,4	5	19	12	8
W7522 6-1/4	6	G1/4	10	11,4	6	19	14	11
W7522 8-1/8	8	G1/8	13,5	13,7	5	21	12	11
W7522 8-1/4	8	G1/4	12	13,7	6	21	14	14
W7522 8-3/8	8	G3/8	12	13,7	7	21	19	19
W7522 10-1/4	10	G1/4	14,5	16,3	6	25	14	16
W7522 10-3/8	10	G3/8	13,5	16,3	7	25	19	23,5
W7522 10-1/2	10	G1/2	13,5	16,3	8	25	24	33
W7522 12-3/8	12	G3/8	14,5	20	7	31	19	24
W7522 12-1/2	12	G1/2	15,5	20	8	31	24	34
W7522 16-1/2	16	G1/2	30	27	8	38	24	51
W7522 16-3/4	16	G3/4	24	27	9	38	30	60,5

Swivel male extended elbow Mod. W7526

Thread BSPP ISO-228



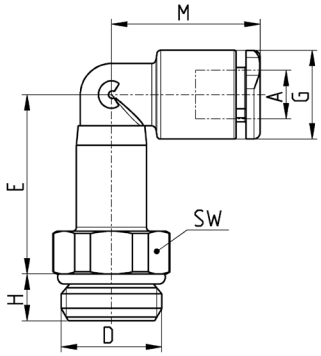

Mod.	A	D	E	G	H	M	SW	Weight [g]
W7526 6-1/8	6	G1/8	23	11,4	5	19	12	13
W7526 6-1/4	6	G1/4	23	11,4	6	19	14	16
W7526 8-1/8	8	G1/8	29	13,7	5	21	12	18
W7526 8-1/4	8	G1/4	27	13,7	6	21	14	20
W7526 8-3/8	8	G3/8	27,5	13,7	7	21	19	24
W7526 10-1/4	10	G1/4	32	16,3	6	25	14	26
W7526 10-3/8	10	G3/8	32	16,3	7	25	19	35
W7526 10-1/2	10	G1/2	32	16,3	8	25	24	45
W7526 12-3/8	12	G3/8	36	20	7	31	19	38,5
W7526 12-1/2	12	G1/2	36	20	8	31	24	46
W7526 16-1/2	16	G1/2	59	27	8	38	24	97
W7526 16-3/4	16	G3/4	59	27	9	38	30	99

Products designed for industrial applications. General terms and conditions for sale are available on www.camozzi.com
This document contains a description of the products offered by Camozzi Automation at time of publication.
For more complete and up to date information about the Camozzi Automation product range, please refer to our online catalogue at https://shop.camozzi.com

Plug-in reducer Mod. W7800



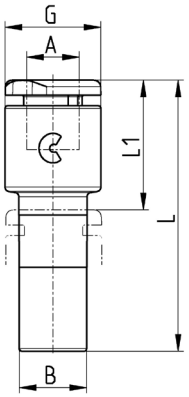

Mod.	A	B	G	L	L1	Weight [g]
W7800 4-6	4	6	9,3	30	14,5	2
W7800 4-8	4	8	9,3	31	14,5	2
W7800 6-8	6	8	11,4	32,5	15,5	2,5
W7800 6-10	6	10	11,4	34,5	15,5	2,5
W7800 6-12	6	12	11,4	36	16,5	3
W7800 8-10	8	10	13,7	35,5	16,5	3
W7800 8-12	8	12	13,7	37,5	17,5	3
W7800 10-12	10	12	16,3	39,5	19,5	3,5

Plug-in elbow Mod. W7555



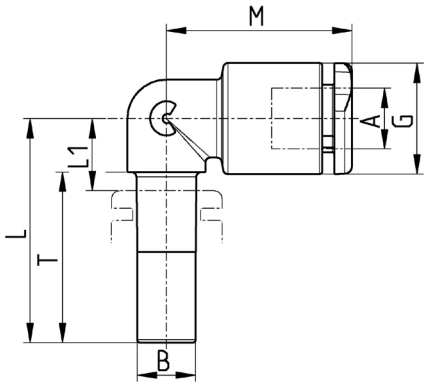

Mod.	A	B	G	L	L1	M	T	Weight [g]
W7555 6-6	6	6	11,4	23	8	19	17,5	2,5
W7555 8-8	8	8	13,7	25	9	21	18,5	3
W7555 10-10	10	10	16,3	29	10	26	21	3,5
W7555 12-12	12	12	20	32	11	31,5	23	6,5

Products designed for industrial applications. General terms and conditions for sale are available on www.camozzi.com
This document contains a description of the products offered by Camozzi Automation at time of publication.
For more complete and up to date information about the Camozzi Automation product range, please refer to our online catalogue at https://shop.camozzi.com

Equal union Mod. W7580



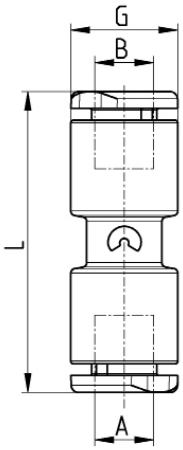

Mod.	A	B	G	L	Weight [g]
W7580 6	6	6	11,4	32	3
W7580 8	8	8	13,7	34,5	4
W7580 10	10	10	16,3	42	5
W7580 12	12	12	20	46	9
W7580 16	16	16	27	60	20

Equal union elbow Mod. W7550



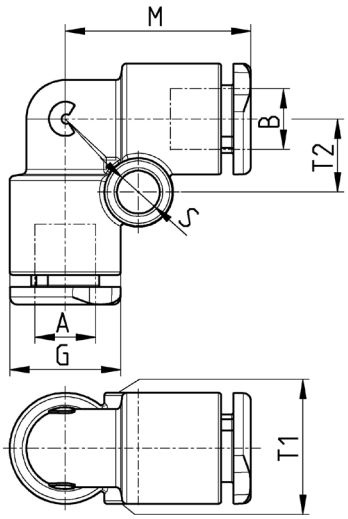

Mod.	A	B	G	M	S	T1	T2	Weight [g]
W7550 6	6	6	11,4	19	4	11,4	7,5	3
W7550 8	8	8	13,7	21	4	13,7	8,5	4
W7550 10	10	10	16,3	26	4,4	16,3	8	5
W7550 12	12	12	20	31,5	4,4	9	9,6	11
W7550 16	16	16	27	38,5	-	-	-	23

Products designed for industrial applications. General terms and conditions for sale are available on www.camozzi.com
This document contains a description of the products offered by Camozzi Automation at time of publication.
For more complete and up to date information about the Camozzi Automation product range, please refer to our online catalogue at https://shop.camozzi.com

Equal union tee Mod. W7540



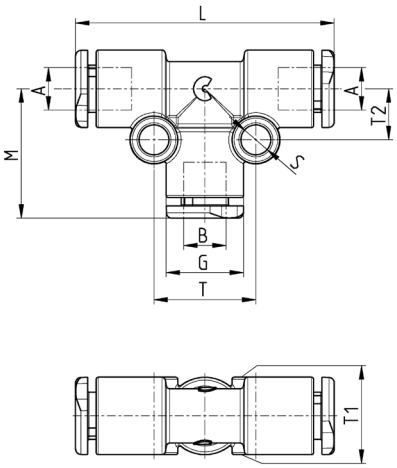

Mod.	A	B	G	L	M	S	T	T1	T2	Weight [g]
W7540 6	6	6	11,4	38	19	4	15	11,4	7,5	6
W7540 8	8	8	13,7	42	21	4	17	13,7	8,5	8
W7540 10	10	10	16,3	52	26	4,4	16	16,3	8	12
W7540 12	12	12	20	63	31,5	4,4	19,2	9	9,6	16
W7540 16	16	16	27	77	38,5	-	-	-	-	32

Multi tee reducer Mod. W7545



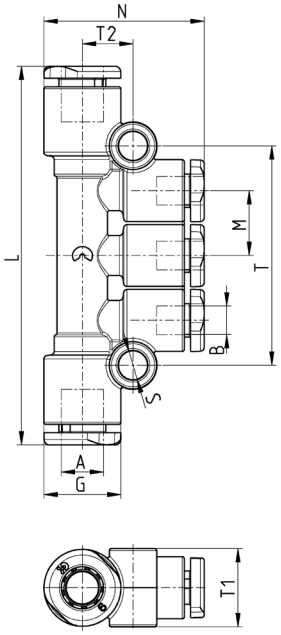

Mod.	A	B	G	L	M	N	S	T	T1	T2	Weight [g]
W7545 8-6	8	6	13,7	65	11,5	27	4	38,2	13,7	9	10
W7545 10-8	10	8	16,3	80,5	14,1	30	4,4	45,8	16,3	10,3	14

Products designed for industrial applications. General terms and conditions for sale are available on www.camozzi.com
This document contains a description of the products offered by Camozzi Automation at time of publication.
For more complete and up to date information about the Camozzi Automation product range, please refer to our online catalogue at https://shop.camozzi.com

Equal union Y Mod. W7560



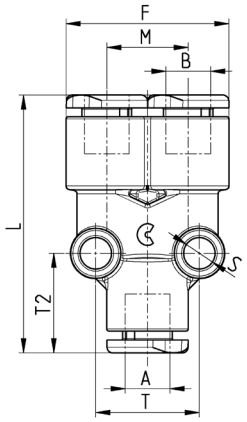

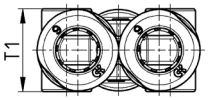

Mod.	A	B	F	L	M	S	T	T1	T2	Weight [g]
W7560 6	6	6	23	36	11,4	4	14,5	11,5	14	9
W7560 8	8	8	27,2	40,5	13,5	4	17	14	15	8
W7560 10	10	10	32,6	49,5	16,3	4,4	16,3	16	14,6	10

Plastic male plug Mod. B6900



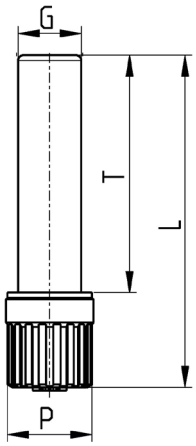

Mod.	G	L	P	T	Weight [g]
B6900 6	6	31,5	8	22,5	1
B6900 8	8	34,5	12	24,5	2
B6900 10	10	37	12	27	2
B6900 12	12	40,5	16	28,5	3

Products designed for industrial applications. General terms and conditions for sale are available on www.camozzi.com
This document contains a description of the products offered by Camozzi Automation at time of publication.
For more complete and up to date information about the Camozzi Automation product range, please refer to our online catalogue at https://shop.camozzi.com

Groove for metal pipe

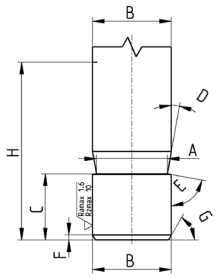

Made by Camozzi grooving tool 8TRT (or machining).

A	B	C	D	E	F	G	H
5,2	6	5,3	10°	80°	0,5	60°	18
7,2	8	6,4	10°	80°	0,5	60°	20
9,2	10	7,75	10°	80°	0,5	60°	22,5
11,2	12	8,15	10°	80°	0,5	60°	21,5
15,1	16	10,35	10°	80°	0,5	60°	25,5

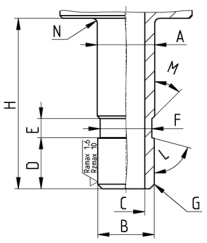

Made by machining.

A	B	C	D	E	F	G	H	L	M	N
6,1	6	4	5,3	2	5,5	0,5x45°	18	75°	45°	0,5
8,1	8	6	6	2	7,5	0,5x45°	20,5	75°	45°	0,5
10,1	10	8	7,5	2	9,5	0,5x45°	23	75°	45°	0,5
12,1	12	10	7,5	2	11,5	0,5x45°	24	75°	45°	0,5
16,1	16	14	12	2	11,5	0,5x45°	32	75°	45°	0,5

Grooving tool for metallic tubes



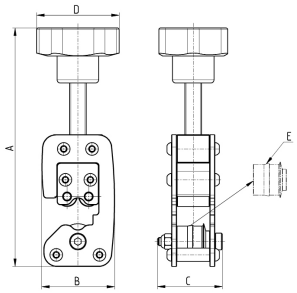

Mod.	Tube Ø	A [max]	B	C	D	Weight [g]	E [spare wheel]
8TRT 6	6	140	43,5	39	50	450	RTRT 6
8TRT 8	8	143	43,5	39	50	450	RTRT 8
8TRT 10	10	145	44	39	50	450	RTRT 10
8TRT 12	12	147	44,5	39	50	450	RTRT 12
8TRT 16	16	151	45	39	50	450	RTRT 16

Plastic junction Mod. 7950



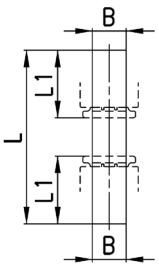

Mod.	B	L	L1	Weight [g]
7950 6	6	39	15	1
7950 8	8	41	16	1
7950 10	10	44	18,5	1
7950 12	12	49	19	1

Products designed for industrial applications. General terms and conditions for sale are available on www.camozzi.com
This document contains a description of the products offered by Camozzi Automation at time of publication.
For more complete and up to date information about the Camozzi Automation product range, please refer to our online catalogue at https://shop.camozzi.com