GRIPFIT PUSH-IN FITTINGS
SERIES 7000 - MEDICAL

Tube external diameters: 4, 6, 8, 10 mm
Fittings threads: ISO-228 BSPP (G1/8, G1/4),
ISO-965 Metric parallel (M5).

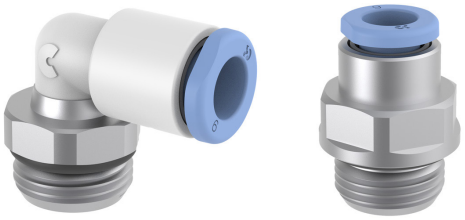

- Oxygen compatibility according to ASTM G93/G93M -19
- Excellent resistance to humidity absorption
- Excellent chemical resistance

Series 7000 Medical push-in fittings are designed for the Life Science market, particularly for medical and analytical applications.
These fittings are mainly made from bio-based materials and are compatible with most medical gases and fluids.

ISO 14743:2020

Reach

RoHS

ASTM G93/ G93M-19

General Data

Diameter		Ø4 mm	Ø6 mm	Ø8 mm	Ø10 mm
Maximum working pressure	- 20° / + 40° + 40° / + 70° + 70° / + 100°	16 bar 16 bar 16 bar	16 bar 14 bar 12 bar	16 bar 12 bar 10 bar	16 bar 12 bar 10 bar
Minimum working pressure	-0,9 bar				
Temperature	-20 ÷ +100 (See characteristics of tubes used)				
Threads	GAS cylindrical ISO-228 BSPP ISO-965 Metric parallel				
Connecting tube	Polyamide (PA 6- PA11 - PA12), Polyurethane (PU), Fluoropolymer (FEP), rigid metal pipe with smooth grooved metal end				
Fluid	Oxygen and medical gases (for other fluids consult our technicians)				
Materials	(A) Body = Technopolymer (PA11), Brass with chemical nickel plating (B) Button = Technopolymer (PA66) (C) Gripping ring = Stainless steel (AISI 301) (D) Seals = EPDM (E) Thread = Brass with chemical nickel plating				

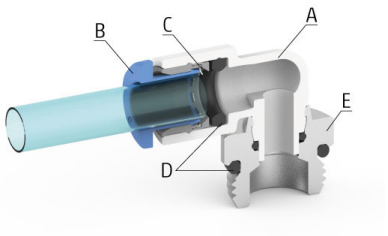

Products designed for industrial applications. General terms and conditions for sale are available on www.camozzi.com
This document contains a description of the products offered by Camozzi Automation at time of publication.
For more complete and up to date information about the Camozzi Automation product range, please refer to our online catalogue at https://shop.camozzi.com

Male straight Mod. W6512 OX1



Chemical nickel-plated brass
Thread metric parallel ISO-965 and BSPP
ISO-228

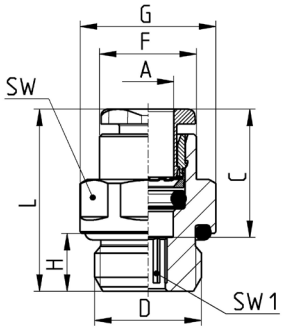

Mod.	A	D	C	F	G	H	L	SW	SW1	Weight [g]
W6512 4-M5-OX1	4	M5x0,8	14,6	8,8	9,9	4	20,5	9	2	3
W6512 4-1/8-OX1	4	G1/8	14,6	8,8	13,5	6	20	12	2,5	8
W6512 6-M5-OX1	6	M5x0,8	15,5	11,7	13,2	4	21,5	12	2	6
W6512 6-1/8-OX1	6	G1/8	15,5	11,7	13,5	6	21	12	4	8
W6512 6-1/4-OX1	6	G1/4	15,5	11,7	16,4	7	22	15	4	11
W6512 8-1/8-OX1	8	G1/8	16,8	13,7	15,2	6	25,2	14	5	12
W6512 8-1/4-OX1	8	G1/4	16,8	13,7	16,4	7	24	15	6	14
W6512 10-1/4-OX1	10	G1/4	19	15,9	18,5	7	28,5	17	7	22,5

Swivel male elbow Mod. W7522 OX1



Thread metric parallel ISO-965 and BSPP
ISO-228

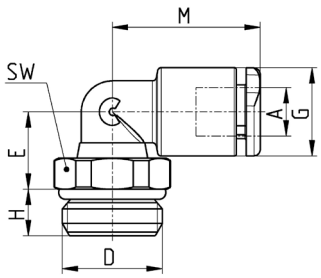

Mod.	A	D	E	G	H	M	SW	Weight [g]
W7522 4-M5-OX1	4	M5x0,8	8,2	9,2	3,5	17,5	9	4
W7522 4-1/8-OX1	4	G1/8	9	9,2	5	17,5	12	7
W7522 6-M5-OX1	6	M5x0,8	9,2	11,4	3,5	19	9	5
W7522 6-1/8-OX1	6	G1/8	10	11,4	5	19	12	8
W7522 6-1/4-OX1	6	G1/4	10	11,4	6	19	14	11
W7522 8-1/8-OX1	8	G1/8	13,5	13,7	5	21	12	11
W7522 8-1/4-OX1	8	G1/4	12	13,7	6	21	14	14
W7522 10-1/4-OX1	10	G1/4	14,5	16,3	6	25	14	16

Products designed for industrial applications. General terms and conditions for sale are available on www.camozzi.com
This document contains a description of the products offered by Camozzi Automation at time of publication.
For more complete and up to date information about the Camozzi Automation product range, please refer to our online catalogue at https://shop.camozzi.com

Plug-in reducer Mod. W7800 OX1



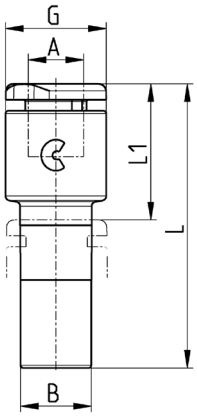

Mod.	A	B	G	L	L1	Weight [g]
W7800 4-6-OX1	4	6	9,3	30	14,5	2
W7800 4-8-OX1	4	8	9,3	31	14,5	3
W7800 6-8-OX1	6	8	11,4	32,5	15,5	4
W7800 6-10-OX1	6	10	11,4	34,5	15,5	6,5
W7800 8-10-OX1	8	10	13,7	36	17	7

Plug-in elbow Mod. W7555 OX1



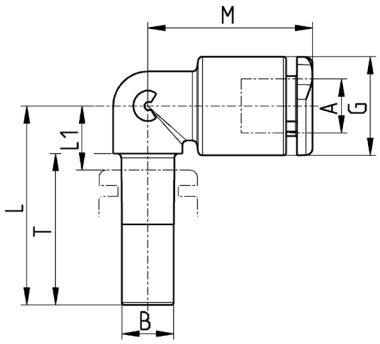

Mod.	A	B	G	L	L1	M	T	Weight [g]
W7555 4-4-OX1	4	4	9,2	21	7	19	16,5	2
W7555 6-6-OX1	6	6	11,4	23	8	19	17,5	2,5
W7555 8-8-OX1	8	8	13,7	25	9	21	18,5	3
W7555 10-10-OX1	10	10	16,3	29	10	26	21	3,5

Products designed for industrial applications. General terms and conditions for sale are available on www.camozzi.com
This document contains a description of the products offered by Camozzi Automation at time of publication.
For more complete and up to date information about the Camozzi Automation product range, please refer to our online catalogue at https://shop.camozzi.com

Equal union Mod. W7580 OX1



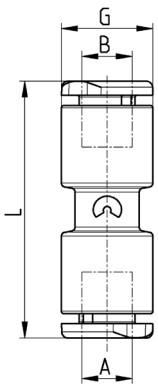

Mod.	A	B	G	L	Weight [g]
W7580 4-OX1	4	4	9,2	30	2
W7580 6-OX1	6	6	11,4	32	3
W7580 8-OX1	8	8	13,7	34,5	4
W7580 10-OX1	10	10	16,3	42	5

Equal union elbow Mod. W7550 OX1

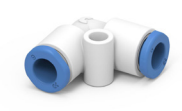

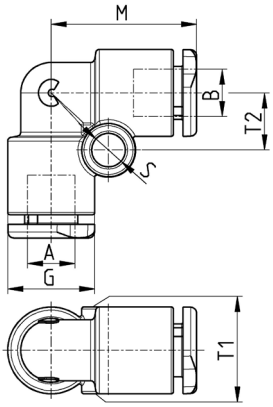

Mod.	A	B	G	M	S	T1	T2	Weight [g]
W7550 4-OX1	4	4	9,2	17,5	4	9,2	6,5	2
W7550 6-OX1	6	6	11,4	19	4	11,4	7,5	3
W7550 8-OX1	8	8	13,7	21	4	13,7	8,5	4
W7550 10-OX1	10	10	16,3	26	4,4	16,3	8	5

Products designed for industrial applications. General terms and conditions for sale are available on www.camozzi.com
This document contains a description of the products offered by Camozzi Automation at time of publication.
For more complete and up to date information about the Camozzi Automation product range, please refer to our online catalogue at https://shop.camozzi.com

Equal union tee Mod. W7540 OX1



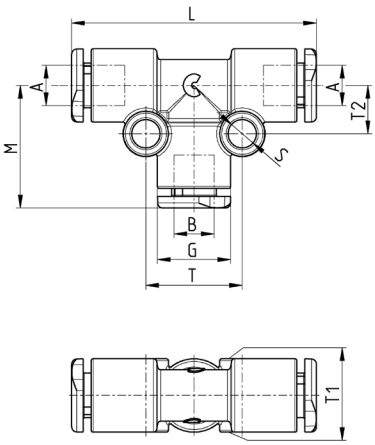

Mod.	A	B	G	L	M	S	T	T1	T2	Weight [g]
W7540 4-OX1	4	4	9,2	35	17,5	4	12	9,2	6,5	4
W7540 6-OX1	6	6	11,4	38	19	4	15	11,4	7,5	6
W7540 8-OX1	8	8	13,7	42	21	4	17	13,7	8,5	8
W7540 10-OX1	10	10	16,3	52	26	4,4	16	16,3	8	12

Equal union Y Mod. W7560 OX1



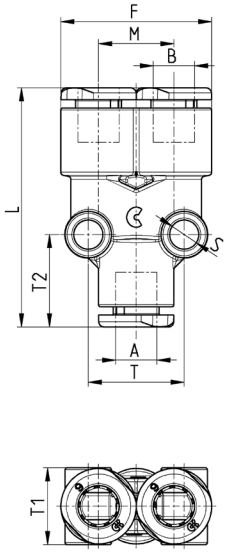

Mod.	A	B	F	L	M	S	T	T1	T2	Weight [g]
W7560 4-OX1	4	4	18,2	34,2	9	4	10,8	9,5	13	5
W7560 6-OX1	6	6	23	36	11,4	4	14,5	11,5	14	6
W7560 8-OX1	8	8	27,2	40,5	13,5	4	17	14	15	8
W7560 10-OX1	10	10	32,6	49,5	16,3	4,4	16,3	16	14,6	10

Products designed for industrial applications. General terms and conditions for sale are available on www.camozzi.com
This document contains a description of the products offered by Camozzi Automation at time of publication.
For more complete and up to date information about the Camozzi Automation product range, please refer to our online catalogue at https://shop.camozzi.com

Plastic male plug Mod. B6900



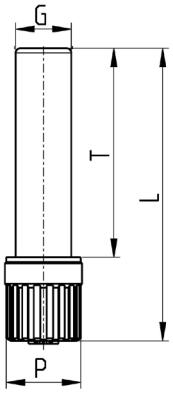

Mod.	G	L	P	T	Weight [g]
B6900 4	4	29	8	20	1
B6900 6	6	31,5	8	22,5	1
B6900 8	8	34,5	12	24,5	2
B6900 10	10	37	12	27	2

Groove for metal pipe

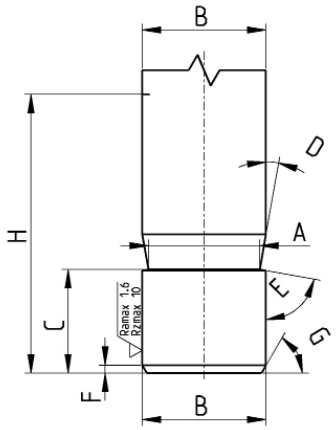

Made by Camozzi grooving tool 8TRT (or machining).

A	B	C	D	E	F	G	H
3,4	4	5,3	10°	80°	0,5	60°	16,5
5,2	6	6,25	10°	80°	0,5	60°	18
7,2	8	6,4	10°	80°	0,5	60°	20
9,2	10	7,75	10°	80°	0,5	60°	22,5

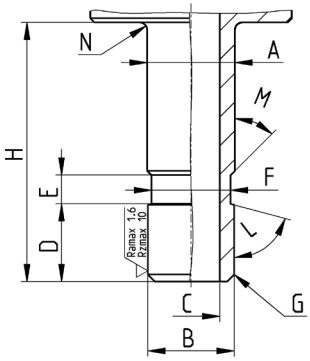

Made by machining.

A	B	C	D	E	F	G	H	L	M	N
4,1	4	2	5,3	2	3,5	0,5x45°	16,5	75°	45°	0,5
6,1	6	4	5,4	2	5,5	0,5x45°	18	75°	45°	0,5
8,1	8	6	6	2	7,5	0,5x45°	20,5	75°	45°	0,5
10,1	10	8	7,5	2	9,5	0,5x45°	23	75°	45°	0,5

Products designed for industrial applications. General terms and conditions for sale are available on www.camozzi.com
This document contains a description of the products offered by Camozzi Automation at time of publication.
For more complete and up to date information about the Camozzi Automation product range, please refer to our online catalogue at https://shop.camozzi.com

Grooving tool for metallic tubes Mod. 8TRT



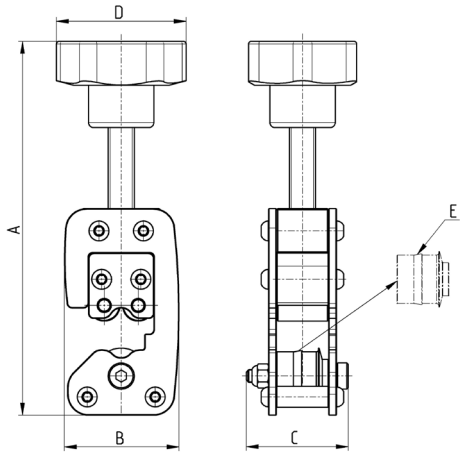

Mod.	Tube Ø	A [max]	B	C	D	Weight [g]	E [spare wheel]
GTRT 4	4	138	43,5	39	50	450	RGTRT 4
8TRT 6	6	140	43,5	39	50	450	RTRT 6
8TRT 8	8	143	43,5	39	50	450	RTRT 8
8TRT 10	10	145	44	39	50	450	RTRT 10

Fittings Mod. 7950



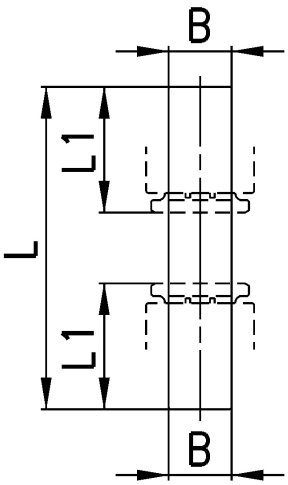

Mod.	B	L	L1	Weight [g]
7950 4	4	37	14	1
7950 6	6	39	15	1
7950 8	8	41	16	1
7950 10	10	44	18,5	1

Products designed for industrial applications. General terms and conditions for sale are available on www.camozzi.com
This document contains a description of the products offered by Camozzi Automation at time of publication.
For more complete and up to date information about the Camozzi Automation product range, please refer to our online catalogue at https://shop.camozzi.com